MINGZHU VALVE 明珠阀门

上海明珠阀门制造有限公司
SHANGHAI MINGZHU VALVE MFG.CO.,LTD.

阀门样本 >>>
VALVE STYLEBOOK

※ 调节阀系列
CONTROL VALVE SERIES

三千控制阀网
www.cv3000.com

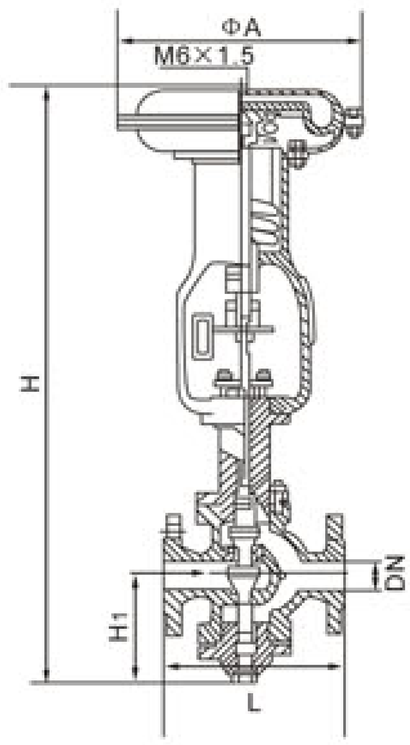

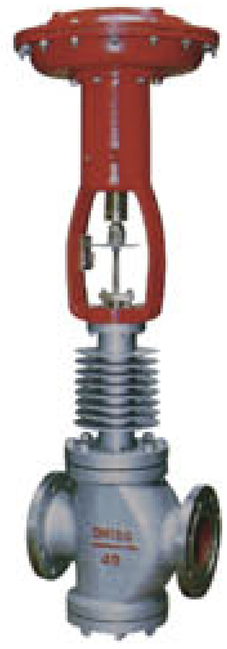

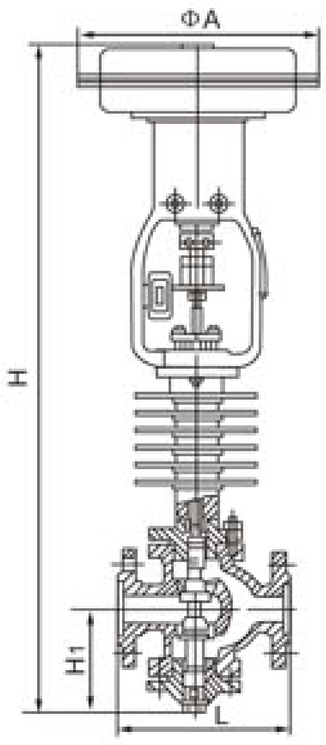

产品概述 Product Summary

气动调节阀由气动薄膜执行机构和调节阀两大部分组成，它与气动调节器，减压阀、定位器或其他仪表配合使用，达到控制管道内的温度、压力、液位、流量等工艺参数。

单座调节阀具有易密封，泄漏量小的优点，但平衡力较大，故工作压差不宜过高。

双座调节阀具有流量系数大，不平衡力较小的特点，因而使用广泛。

The pneumatic film control valve is composed of pneumatic film actuator and control valve. It should be used together with pneumatic controller, relief valve, localizer or other instruments, so as to achieve the controlling process parameter in the pipeline such as temperature, pressure, liquid level, flux and etc.

The single-seat valve has advantage of easy seal and small unbalance force, but the actual relatively large balance force does not allow the working pressure differential too high.

The double seat valve has characteristic of large flow coefficient and small unbalance force and thus be widely used.

主要技术参数 Main technical parameter

输入信号 Input signal	0~10mA(4~20mA)	
流量特性 Flux characteristic	直线等百分比(对数) Lining equal percentage (logarithm)	
工作条件 Working condition	0.14MPa Air supply (气源)	
介质温度 Medium temperature	常温型Normal temperature type	铸铁(Cast iron)-20~200℃
		碳钢(Carbon steel)-40~250℃
	散热型Heat-scattering type	碳钢(Carbon steel)-60~450℃
		不锈钢(Stainless steel)-40~450℃
环境温度 Environmental temperature	-25~55℃	
适用介质 Suitable medium	水、蒸汽等气、液态介质 Gaseous or liquid medium like water、steam and etc.	

三十控制阀网 www.cv3000.com

型号、代号意义 Code significance:

ZM □ □ - □ □ G

- G：尾注：G表示散热型 Endnotes: G represents for heat-scattering type
- □：阀作用形式：B电闭式、K电开式 Valve type: B close by electricity on、K open by electricity on
- □：公称压力 Nominal pressure
- □：调节阀单座(P)、双座(N) Control valve single seat (P)、double seat (N)
- □：执行机构作用方式：A表示正作用、B表示反作用 Actuator acting way: A represents for direct action、B represents for back action
- ZM：气动薄膜执行机构 Pneumatic film actuator

主要连接及外形尺寸 Main connection and external dimensions(mm)

公称通径 DN(mm) Nominal diameter	Dimension 尺 寸 (mm)									输出压力 output pressure(kgf/cm²)				额定流量系数C Rated flux coefficient	
	L		ZMAP(type)型			ZMAN(type)型			ΦA	单座single-seat		双座double-seat			
	PN1.6 MPa	PN6.4 MPa	H 常温型Normal temperature type	H 散热型Heat-scattering type	H1	H 常温型Normal temperature type	H 散热型Heat-scattering type	H1		0.2	0.4	0.2	0.4	单座 single-seat	双座 double-seat
										允许压差allowable pressure differential		允许压差allowable pressure differential			
20	180	190	654	799	93	/	/	/	280	13	27	/	/	1.2~5	/
25	185	205	669	725	110	679	785	117		8	16	54	64	8	10
32	200	220	680	786	120	684	790	120		5	11	44	64	12	16
40	220	240	754	854	130	774	874	138	325	5	10	46	64	20	25
50	250	265	785	885	145	785	885	144		3	6	38	64	32	40
65	275	295	991	1138	180	1011	1158	188	410	3	6	47	64	50	63
80	305	325	1008	1162	190	1042	1196	208		2	4	36	64	80	100
100	350	370	1015	1169	195	1065	1219	220		1.2	2.4	28	56	120	160
150	450	475	1286	1469	250	1340	1523	278	495	0.8	1.6	27	54	280	400
200	550	570	1363	1546	290	1423	1660	320		0.8	1.0	21.5	43	450	630

ZJHP气动薄膜精小型单座调节阀
ZJHP PNEUMATIC FILM TINY SINGLE-SEAT CONTROL VALVE

明珠阀门 MINGZHU VALVE

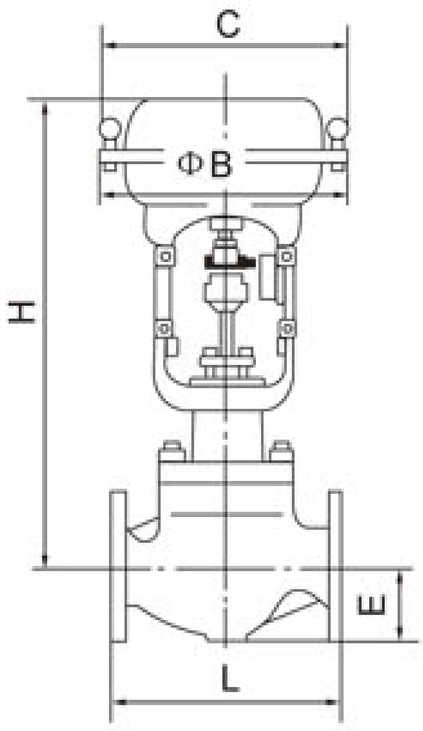

ZJHP气动薄膜精小型单座调节阀是一种顶导向结构的调节阀，阀体结构紧凑，流体通道呈S流线型，压降损失小，流量大、可调范围广。流量特性曲线精度高，符合IEC534-1-1976标准。阀芯导向面积大，抗振性好，阀座泄漏量符合ANSI B16.104标准。

调节阀配用多弹簧式薄膜执行机构，其结构紧凑，输出力大。可广泛控制各种不同压力和温度的流体。

ZJHP Pneumatic film tiny single-seat control Valve is a kind of conduct balancing control valve, with compact structure of valve body and stream fluid passage with the characteristics of low loss of pressure drop, large flux, wide adjustable extent and high precision of characteristic curve of flux, and accords with IEC534-1-1976 standard. The valve core is of large guiding area and good anti-vibration, and the leakage volume of valve base accords with ANSI B16.104 standard.

Attached with multi-spring film actuator, the control valve is of compact structure, large output, and can be widely used to control all kinds of fluids of different pressure and temperature.

技术参数和性能 Technical parameter and property

阀体 Valve body

形　　式：直通单座铸造球形阀
公称通径：20、25、40、50、65、80、100、150、200mm
公称压力：PN1.6、4.0、6.4MPa
材　　料：铸铁，碳钢(WCB)和不锈钢(ZG1Cr18Ni9和ZG0Cr17Ni12Mo2),铬钼钢 (1.25Cr0.5Mo,5.0Cr0.5Mo或SCPH21,SCPH61),钛(Ti)。
上 阀 盖：常温型(P) -17~230℃、伸长Ⅰ型(E1) -45~-17℃,230~566℃
压盖形式：螺栓压紧式
填　　料：V型聚四氟乙烯填料，含浸聚四氟乙烯石棉填料，石棉编织填料。
Model: Through-way single-seat cast spherical valve
Nominal diameter：20、25、40、50、65、80、100、150、200mm
Nominal pressure：PN1.6、4.0、6.4MPa
Materials：Cast iron(HT200)，carbon steel(WCB), stainless steel(ZG1Cr18Ni9 & ZG0Cr17Ni12Mo2), chrome molybdenum steel (1.25Cr0.5Mo,5.0Cr0.5Mo.or SCPH21,SCPH61),titanium(Ti).
Upper bonnet：Normal temperature type(P) -17~230℃
Extended type I (E1) -45~-17℃,230~566℃
Capping: Bolt pressing form
Packing: PTFE packing (V type), teflon impregnated asbestos packing and asbestos woven packing.

阀内组件 Modules inside the valve

阀芯形式：上导向单座柱塞阀芯	Valve core form: top oriented single-seat plunger valve core
流量特性：等百分比(%)和线性(L)	Flow feature: equal percentage (%) and linearity (L)
材　　料：不锈钢(17-4PH,0Cr17Ni12Mo2)	Material: stainless steel (17-4PH, 0Cr17Ni12Mo2)

执行机构 Actuator

形　　式：HA多弹簧式薄膜执行机构	Form: HA multi-spring film actuator
膜片材料：乙丙橡胶夹尼龙	Film material: ethylene-propylene rubber nylon
弹簧范围：20~100，80~240kPa	Spring range：20~100，80~240kPa
供气压力：140，160，200，400kPa	Air supply pressure：140，160，200，400kPa
气源接头：Rc1/4	Air source connector：Rc1/4
环境温度：-30~70℃	Environmental temperature：-30~70℃

阀作用形式： 用正作用或反作用执行机构实现阀的气一关式或气一开式
Functioning form of the valve: to realize air-opening or air-closing with the active or counteractive actuator.

附件： 定位器、手轮机构、气动阀位传送器
Accessories: localizer、hand wheel mechanism and pneumatic valve position transmitting

性能 Performance

泄 漏 量: 符合标准ANSI B16.104-1976 Ⅳ级，小于额定Kv的0.01%	Leakage ratio: meet the requirements of ANSI B16.104-1976 class IV. less than 0.01% of the rated Kv.
回　　差: 小于全行程的3%(不带定位器) 小于全行程的1%(带定位器)	Return difference: less than the 3% of the full journey (without a localizer) less than the 1% of the full travel (with a localizer)
线　　性: 小于全行程的±5%(不带定位器) 小于全行程的±1%(带定位器)	Linearity: less than the ±5% of the full journey (without a localizer) less than the ±1% of the full journey (with a localizer)
可调范围: 50：1	Adjustable range: 50：1

三千控制阀网 www.cv3000.com

ZJHP气动薄膜精小型单座调节阀
ZJHP PNEUMATIC FILM TINY SINGLE-SEAT CONTROL VALVE

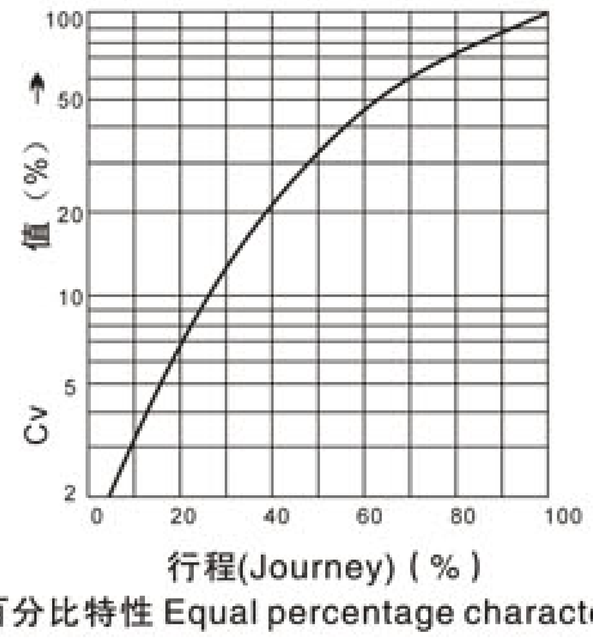

等百分比特性 Equal percentage characteristics

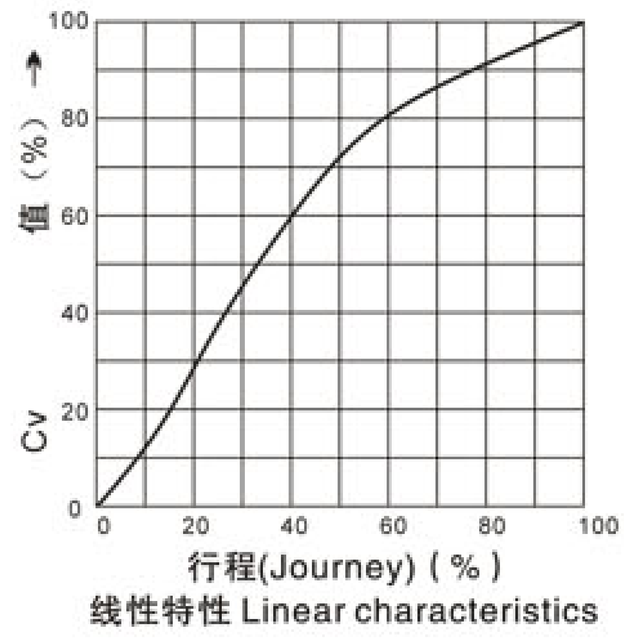

线性特性 Linear characteristics

图1 流量特性曲线 Fig 1 Flux characteristics curve

型号编制说明 Model compiling specification

ZJHP □ □ □

- 上阀盖形式：伸长Ⅰ型 Upper bonnet type: extended type I
- 阀作用形式：气关(B)，气开(K) Valve acting form: gas close(B), gas open(K)
- 公称压力：PN1.6、4.0、6.4MPa Nominal pressure: PN1.6、4.0、6.4MPa
- 气动薄膜精小型单座调节阀 Pneumatic film tiny single-seat control valve

法兰距、外形尺寸重量 Flange distance and external dimension & weight

单位(unit)：mm

公称通径 Nominal Diameter	L 公称压力Nominal Pressure PN1.6	L PN4.0	L PN6.4	H 普通型 Normal type	H 伸长Ⅰ型 Extended type I	E	C	重量 weight (kg)
20	194	206	184	450	600	40	281	24
25	197	210	184	450	600	40		26
40	235	251	222	500	665	70		44
50	267	286	254	500	670	82		47
65	292	311	276	630	810	88	363	77
80	317	337	298	635	820	98		97
100	368	394	352	660	870	113		125
150	473	508	451	785	1045	170		237
200	568	610	543	1090	1350	220	520	438

备注：重量为PN6.4MPa常温阀 Remark: Normal temperature valve of weight of PN6.4MPa

一千控制阀网 www.cv3000.com

额定流量系数Kv Rated coefficient of flow Kv

单位(unit)：T/h

公称通径 Nominal diameter(mm)	20				25	40		50	65	80	100	150		200
阀座直径 Base diameter(mm)	10	12	15	20	25	32	40	50	65	80	100	125	150	200
额定行程 Rated journey(mm)	14.3					25			38			50		75
流量系数 Flow coefficient(Kv)	2.1	3.5	5.2	8.5	12	20	26	43	73	107	171	235	360	600

订货须知

订货时，请写明：

1、型号
2、公称通径×阀座直径
3、阀体和阀内组件材料，表面硬化处理要求
4、上阀盖形式
5、流量特性
6、执行机构型号，供气压力
7、附件(定位器、手轮机构、减压阀等)
8、阀作用形式(气一关式还是气一开式)
9、特殊要求，禁油、禁铜等
10、介质名称
11、正常流量和要求大流量
12、介质压力，最大流量和最小流量时的进口压力和出口压力
13、介质温度和比重
14、介质粘度，是否含有悬浊液

Notice for ordering

Please specify when ordering

1. Model
2. Nominal diameter × diameter of valve base.
3. Surface hardening treatment is required for the valve body and valve component materials.
4. Upper bonnet form.
5. Flux feature
6. Actuator model and gas supplying pressure.
7. Accessory (locator, handwheel mechanism, relief valve).
8. The functioning form of the valve (air-opening or air-closing).
9. Special requirements: oil and copper forbidden.
10. Medium name.
11. Normal flow and required large flow.
12. Medium pressure, the inlet and outlet pressure on conditions of minimum flow and maximum flow.
13. The temperature and specific gravity of medium.
14. The viscosity of medium, and whether it contains suspending liquid.

ZJHM气动薄膜精小型套筒调节阀
ZJHM PNEUMATIC FILM TINY SLEEVE BARREL CONTROL VALVE

明珠阀门 MINGZHU VALVE

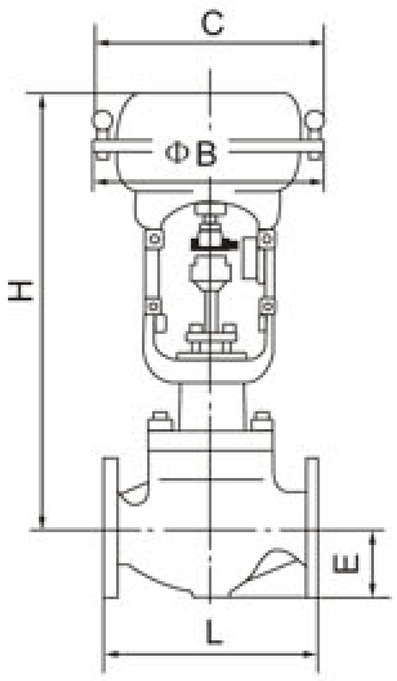

ZJHM气动薄膜精小型套筒调节阀是一种压力平衡式的调节阀，阀体结构紧凑，流体通道呈S流线型，还没有一个改善套筒周围流体平稳流动的导流翼，优点是压降损失小，流量大、可调范围广，流量特性曲线精度高，符合IEC534-1-1976标准。

调节阀配用多弹簧式薄膜执行机构，其结构紧凑，输出力大。调节阀动态稳定性好，噪音低，空化腐蚀小，适宜控制高温，低温的高压差流体。

ZJHM pneumatic film tiny-sleeve barrel control valve is a kind of pressure balancing control valve, with compact structure of valve body and S-stream fluid passage. It also has a contra vane which can improve the fluid around the sleeve barrel for smooth flow, with the characteristics of low loss of pressure drop, large f-lux, wide adjustable extent and high precision of characteristic c-urve of flux, and accords with IEC534-1-1976 standard.

Attached with multi-spring film actuator, the control valve is of compact structure, large output, excellent dynamic stability, low noise and less cavitation erosion, and applicable for the control-ling of high pressure differential fluid at high and low and tempe-ratures.

技术参数和性能 Technical parameter and property

阀体 Valve body

形　　式：直通单座铸造球形阀
公称通径：40、50、65、80、100、150、200mm
公称压力：PN1.6、4.0、6.4MPa
材　　料：铸铁，碳钢(WCB)和不锈钢(ZG1Cr18Ni9和ZG0Cr17Ni12Mo2),铬钼钢 (1.25Cr0.5Mo,5.0Cr0.5Mo或SCPH21,SCPH61),钛(Ti)。
上 阀 盖：常温型(P) -17~230℃、伸长Ⅰ型(E1) -45~-17℃,230~566℃
压盖形式：螺栓压紧式
填　　料：V型聚四氟乙烯填料，含浸聚四氟乙烯石棉填料，石棉编织填料。

Model: Through-way single-seat cast spherical valve
Nominal diameter：40、50、65、80、100、150、200mm
Nominal pressure：PN1.6、4.0、6.4MPa
Materials：Cast iron(HT200)，carbon steel(WCB), stainless steel(ZG1Cr18Ni9 & ZG0Cr17Ni12Mo2), chrome molybdenum steel (1.25Cr0.5Mo,5.0Cr0.5Mo.or SCPH21,SCPH61),titanium(Ti).
Upper bonnet：Normal temperature type(P) -17~230℃
Extended type I (E1) -45~-17℃,230~566℃
Capping: Bolt pressing form
Packing: PTFE packing (V type), teflon impregnated asbestos packing and asbestos woven packing.

阀内组件 Modules inside the valve

阀芯形式：压力平衡式阀芯	Valve core form: pressure balancing valve core
流量特性：等百分比(%)和线性(L)	Flow feature: equal percentage (%) and linearity (L)
材　　料：不锈钢(17-4PH,0Cr17Ni12Mo2)	Material: stainless steel (17-4PH, 0Cr17Ni12Mo2)

执行机构 Actuator

形　　式：HA多弹簧式薄膜执行机构	Form: HA multi-spring film actuator
膜片材料：乙丙橡胶夹尼龙	Film material: ethylene-propylene rubber nylon
弹簧范围：20~100，80~240kPa	Spring range：20~100，80~240kPa
供气压力：140，160，200，400kPa	Air supply pressure：140，160，200，400kPa
气源接头：Rc1/4	Air source connector：Rc1/4
环境温度：-30~70℃	Environmental temperature：-30~70℃

阀作用形式： 用正作用或反作用执行机构实现阀的气一关式或气一开式
Functioning form of the valve: to realize air-opening or air-closing with the active or counteractive actuator.

附件： 定位器、手轮机构、气动阀位传送器
Accessories: localizer、hand wheel mechanism and pneumatic valve position transmitting

性能 Performance

泄 漏 量: 符合标准ANSI B16.104-1976 Ⅳ级，小于额定Kv的0.5%	Leakage ratio: meet the requirements of ANSI B16.104-1976 class IV. less than 0.5% of the rated Kv.
回　　差: 小于全行程的3%(不带定位器) 小于全行程的1%(带定位器)	Return difference: less than the 3% of the full journey (without a localizer) less than the 1% of the full travel (with a localizer)
线　　性: 小于全行程的±5%(不带定位器) 小于全行程的±1%(带定位器)	Linearity: less than the ±5% of the full journey (without a localizer) less than the ±1% of the full journey (with a localizer)
可调范围: 50：1	Adjustable range: 50：1

三千控制阀网 www.cv3000.com

ZJHM气动薄膜精小型套筒调节阀
ZJHM PNEUMATIC FILM TINY-SLEEVE BARREL CONTROL VALVE

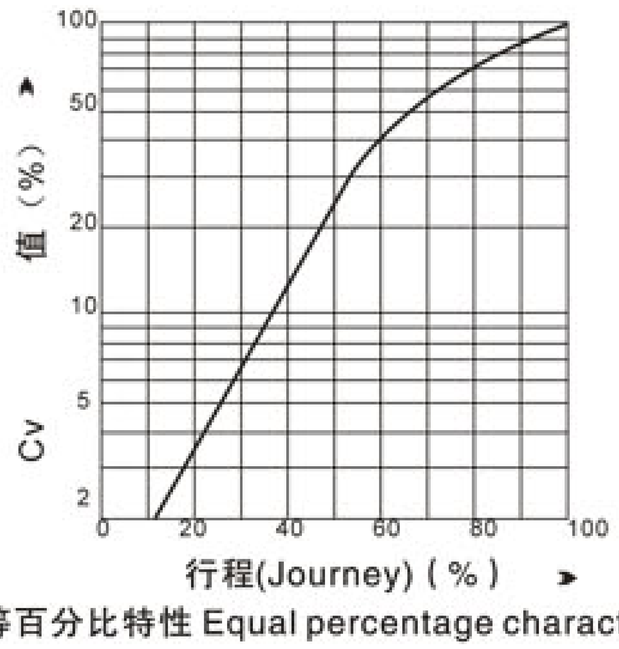

等百分比特性 Equal percentage characteristics

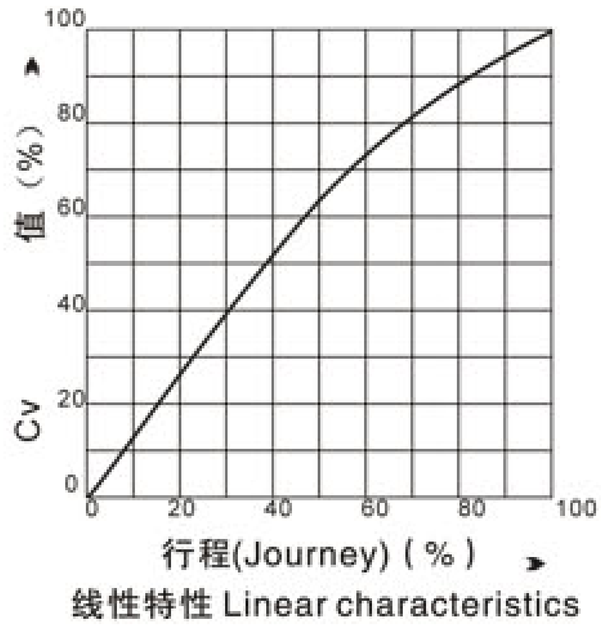

线性特性 Linear characteristics

图1 流量特性曲线 Fig 1 Flux characteristics curve

型号编制说明 Mode compiling specification

ZJHM □ □ □

- 上阀盖形式：伸长Ⅰ型 Upper bonnet type: extended type I
- 阀作用形式：气关(B)，气开(K) Valve acting form: gas close(B), gas open(K)
- 公称压力：PN1.6、4.0、6.4MPa Nominal pressure: PN1.6、4.0、6.4MPa
- 气动薄膜精小型套筒调节阀 Pneumatic film tiny-sleeve barrel control valve

法兰距、外形尺寸重量 Flange distance and external dimension & weight

单位(unit)：mm

公称通径 Nominal Diameter	L 公称压力Nominal Pressure PN1.6	L PN4.0	L PN6.4	H 普通型 Normal type	H 伸长Ⅰ型 Extended type I	E	C	重量 weight (kg)
40	222	235	251	665	500	87	281	44
50	254	267	286	670	500	82		47
65	276	292	311	810	630	88	363	77
80	298	317	337	820	635	98		97
100	352	368	394	870	667	113		125
150	451	473	508	1045	705	170		237
200	543	568	610	1350	1090	220	520	438

备注：重量为PN6.4MPa常温阀 Remark: Normal temperature valve of weight of PN6.4MPa

一千控制阀门 www.cv3000.com

额定流量系数Kv Rated coefficient of flow Kv

单位(unit)：T/h

公称通径 Nominal diameter(mm)		40			50	65	80	100	150		200
阀座直径 Base diameter(mm)		25	32	40	50	65	80	100	125	150	200
额定行程 Rated journey(mm)		25				38			50		75
流量系数 Flow coefficient (Kv)	线性Linearity	9.4	14.5	34	64	94	128	205	235	372	726
	等百分比equal percentage	9.4	14.5	31	51	85	120	188	235	359	700

订货须知

订货时，请写明：

1、型号
2、公称通径×阀座直径
3、阀体和阀内组件材料，表面硬化处理要求
4、上阀盖形式
5、流量特性
6、执行机构型号，供气压力
7、附件(定位器、手轮机构、减压阀等)
8、阀作用形式(气一关式还是气一开式)
9、特殊要求，禁油、禁铜等
10、介质名称
11、正常流量和要求大流量
12、介质压力，最大流量和最小流量时的进口压力和出口压力
13、介质温度和比重
14、介质粘度，是否含有悬浊液

Notice for ordering

Please specify when ordering

1. Model
2. Nominal diameter × diameter of valve base.
3. Surface hardening treatment is required for the valve body and valve component materials.
4. Upper bonnet form.
5. Flux feature
6. Actuator model and gas supplying pressure.
7. Accessory (locator, handwheel mechanism, relief valve).
8. The functioning form of the valve (air-opening or air-closing).
9. Special requirements: oil and copper forbidden.
10. Medium name.
11. Normal flow and required large flow.
12. Medium pressure, the inlet and outlet pressure on conditions of minimum flow and maximum flow.
13. The temperature and specific gravity of medium.
14. The viscosity of medium, and whether it contains suspending liquid.

自力式压力调节阀
SELF-ACTUATED PRESSURE CONTROL VALVE

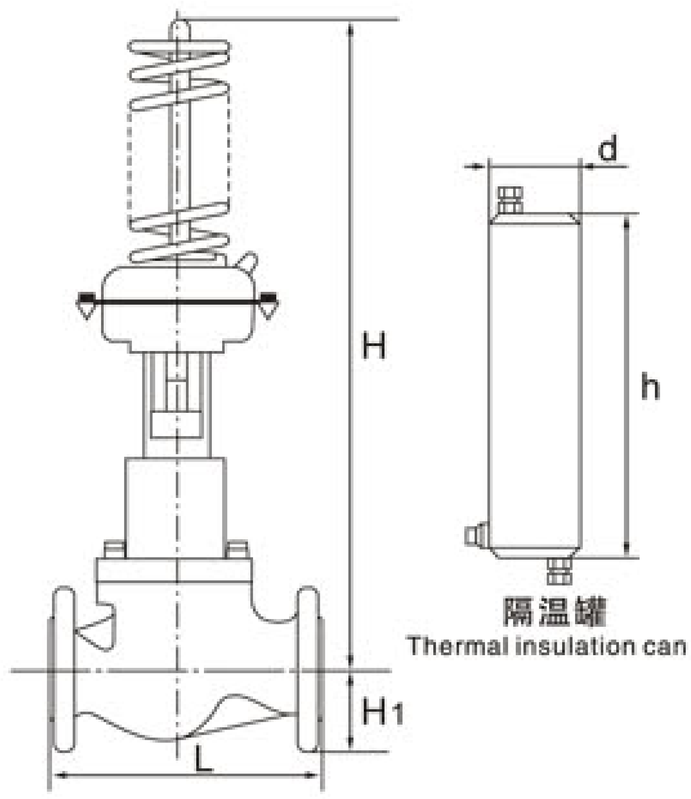

主要零件材料：Materials for main parts

阀体 Body：ZG230~450、ZG1Cr18Ni9Ti、ZGCr18Ni12Mo2Ti

阀芯 Core：1Cr18Ni9Ti、Cr18Ni12Mo2Ti

阀座 Seat：1Cr18Ni9Ti、Cr18Ni12Mo2Ti

阀杆 Stem：1Cr18Ni9Ti、Cr18Ni12Mo2Ti

膜盖 Film cover：A3、1Cr18Ni9Ti

填料 Packing：聚四氟乙烯、柔性石墨 (PTFE、flexible graphite)

膜片 Film plate：丁晴橡胶、耐油橡胶、氟橡胶 (BUNA-N、oil-proof rubber、FPM)

概述 Summary

MZYP(B、K) 型自力式压力调节阀是一种无需外来能源而只利用被调介质自身的压力变化来进行自动调节阀前或阀后恒压或减压的节能型产品，附带隔温罐可在350℃蒸汽下连续使用。广泛应用于城市供热、供暖系统及石油、化工、电力、冶金、食品、轻工等各种工业设备中气体、液体、蒸汽等介质的减压、泄阀，恒压。

(B)控制阀后压力　(K)控制阀前压力

MZYP(B、K) type self-actuated pressure control valve is a kind of energy saving products that automatically maintain or reduce the back or front pressures of the valve without the need for outside power and only by making use of the pressure changing of the controlled medium. The insulating can that accompanied can be continuously used under the condition of 350℃ steam. This product is widely used for the pressure releasing, valve discharging and pressure maintaining of gas, liquid, steam and other mediums of various industrial facilities of industries such as urban heating system, petroleum, chemical, electric power, refining, food, and light industry and etc.

(B) Control the back pressure of the valve　(K) Control the front pressure of the valve

三丰控制阀网 www.cv3000.com

主要技术参数 Main technical parameter

公称通径 Nominal diameter(mm)		20	25	32	40	50	65	80	100	125	150	200	250	300
额定流量系数 Rated flow coefficient (Kv)		7	11	20	30	48	75	120	190	300	480	760	1100	1750
额定行程 Rated journey(mm)		8		10		14	20		25	40		50	60	70
公称压力 Nominal pressure		1.6、4.0												
压力调节范围 Pressure adjustable scope (KPa)		15~50、40~80、60~100、80~140、120~180、160~220、200~260、240~300、280~350、330~400、380~450、430~500、480~560、540~620、600~700、680~800、780~900、880~1000、600~1500、1000~2500												
固有流量特性 Fixed flow characteristic		快开 Fast opening												
调节精度 Adjustment precision(%)		±5												
使用温度 Using temperature(℃)		≤350												
允许泄漏量 Allowable spillage	硬密封 Hard seal(1/h)	单座：≤10^{-4}×阀额定容量(Ⅳ级)、双座和套筒：≤5×10^{-3}阀额定容量(Ⅱ级) Single seat:≤10^{-4}× valve rated capacity (level IV)、double seat and sleeve:≤5×10^{-3}valve rated capacity(level II)												
	软密封 Soft seal (m1/min)	0.15		0.30		0.45	0.60	0.90	1.70	4.0		6.75	11.10	16.0
减压比 Pressure reducing ratio	最大 Max	10												
	最小 Min	1.25												

安装方式说明 Specification for installation

A

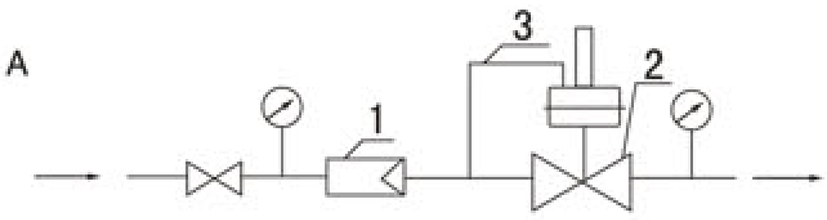

测量气体，阀前压力调节(K型)，过滤器可不装。
Measure the gas and adjust the front pressure of the valve (K type). The filter is optional.

B

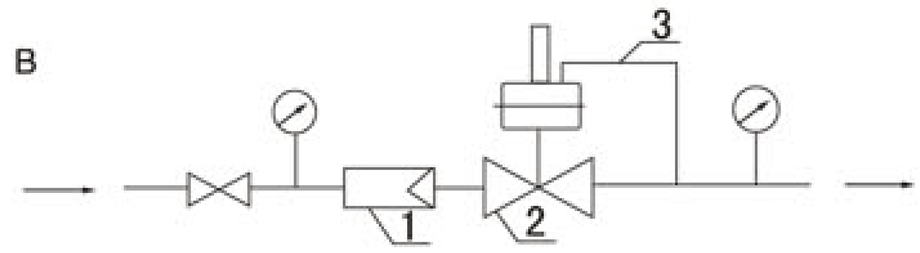

测量气体，阀后压力调节(B型)，过滤器可不装。
Measure the gas and adjust the back pressure of the valve (B type). The filter is optional.

C

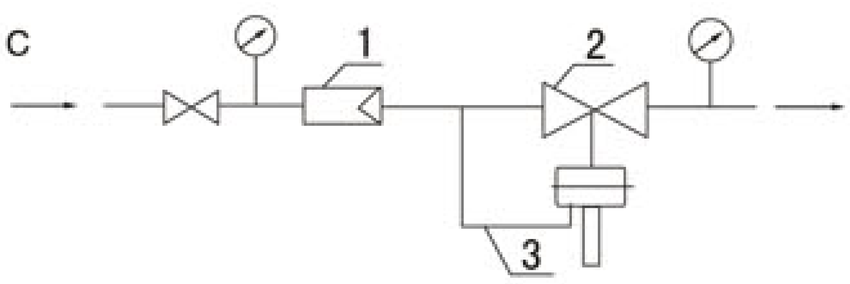

测量液体，阀前压力调节(K型)，
对于非清洁流体，应装过滤器。
Measure the liquid and adjust the front pressure of the valve (K type). For unclean fluid, the filter should be installed.

D

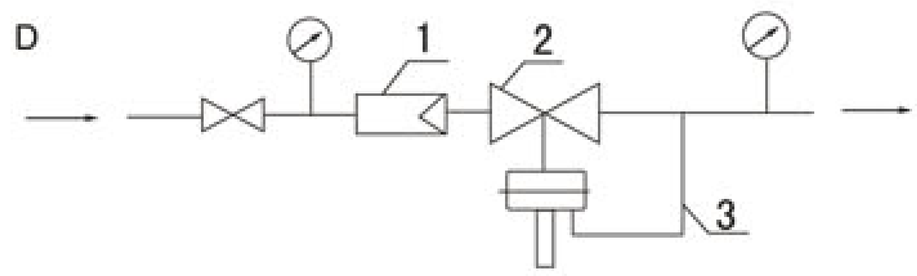

测量液体，阀后压力调节(B型)，
对于非清洁流体，应装过滤器。
Measure the liquid and adjust the front pressure of the valve (K type). For unclean fluid, the filter should be installed.

三千控制阀网
www.cv3000.com

E

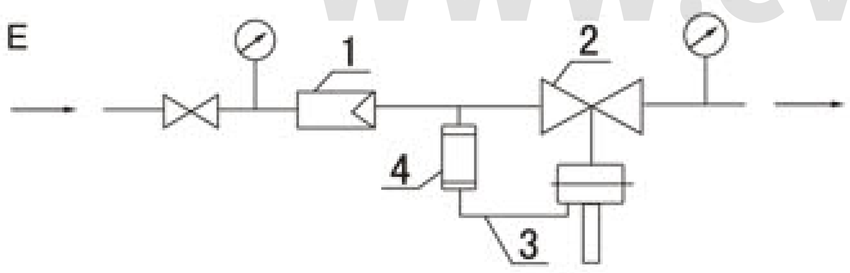

测量蒸汽，阀前压力调节(K型)，
应装隔温罐，建议装过滤器。
Measure the steam and adjust the front pressure of the valve (K type). Insulating can should be installed. The filter is recommended.

F

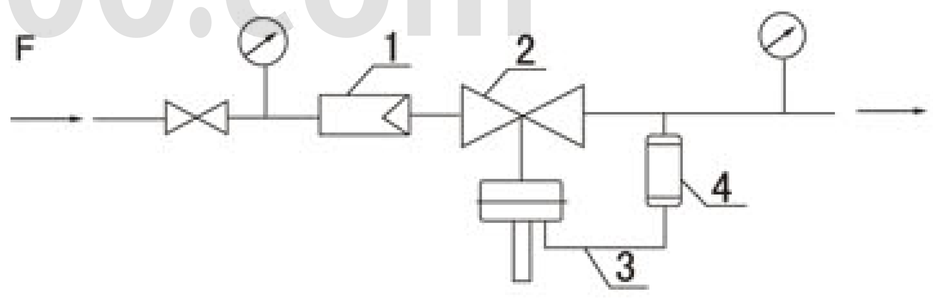

测量蒸汽，阀后压力调节(B型)，
应装隔温罐，建议装过滤器。
Measure the steam and adjust the front pressure of the valve (K type). Insulating can should be installed. The filter is recommended.

注： 1.过滤器 2.自力式调节阀 3.取压管Φ14×2 4.冷凝罐
Note: 1. Filter 2. Self-actuated control valve 3. Pressure measuring pipe Φ14×2 4. Condensing can

主要连接及外形尺寸 Main connection and external dimensions(mm)

单位(unit)：mm

公称通径 Nominal diameter(mm)	20	25	32	40	50	65	80	100	125	150	200	250	300
法兰距离 Flange distance(L)	185	200	205	222	254	276	298	352	410	451	600	670	735
总高度 Total height(H)	615	645	650	710	730	745	760	800	890	960	1050		
H_1	52.5	57.5	67.5	72.5	80	90	97.5	107.5	122.5	140	167.5	225	230
d	100												
h	280												
法兰标准 Flange standard	GB：PN1.6、2.5、4.0MPa ANSI:150、300Lb JIS：10K、20K												

ZSHR系列气动O型球阀
ZSHR SERIES PNEUMATIC O-TYPE BALL VALVE

明珠阀门 MINGZHU VALVE

ZSHR系列气动O型球阀是一种转角为90° 的旋转类调节阀，密封性能优良，流通能力大，流阻系数小，结构简单，使用寿命长，便于维修。配用的执行机构是引进国外先进技术生产的MZQ系列气缸式执行机构，具结构简单、紧凑、性能优、输出力矩大等特点。产品广泛应用于化工、石油、轻纺、电力、食品制药、制冷、航空、航天、造纸等工业领域，不仅能控制气体、液体和蒸汽介质，也适用于控制污水和含有纤维的介质。

The pneumatic O type control ball valve of ZSHR series is a kind of rotating control valve with a rotating angle of 90° . It has advantages of excellent sealing, strong ability of circulating, small coefficient of flow resistance, simple structure, long working life and convenient maintenance. The attaching actuator is of the MZO series cylinder actuator that introduces the advanced foreign technologies owning characteristic of simple &compact structure, great performance, large output moment and so on. This product is widely used in industrial fields of chemical, petroleum, light textile, electric power, food, pharmacy, refrigeration, aviation, space flight and paper making. It can be applied not only to control mediums of gas, liquid and steam, but also to mediums of sewage and fibre containing.

执行机构的结构特点 The structure features of the actuator

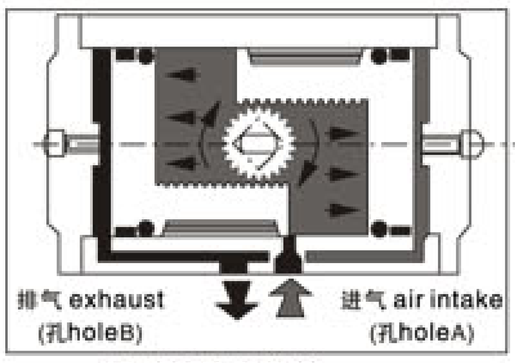

顺时针输出旋转
clockwise output rotation

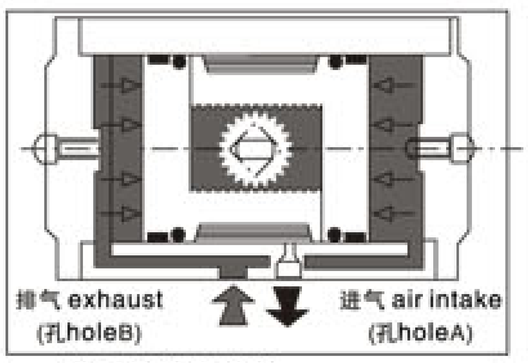

逆时针输出旋转
counterclockwise output rotation

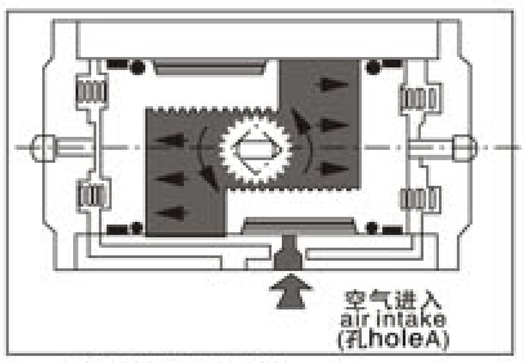

逆时针输出旋转
counterclockwise output rotation

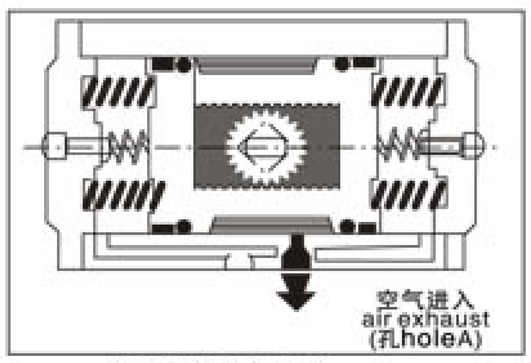

顺时针输出旋转
clockwise output rotation

(一)双作用式执行机构工作原理：

顺时针输出操作，从A孔输入压力，迫使活塞朝两边分开，从而使杆顺时针方向旋转。带动阀芯反转90° ，此时空气从活塞端面与气缸盖夹缝空间(外室)经B孔排出，逆时针操作与此相反，压力从B孔输入，从A孔排出。

I. Working principle of the double-action actuator:

Clockwise output operation. Input pressure into the Hole A to force the pistons to part to the two sides so as to make the handle rotate clockwise. The valve core is driven to reversely rotate 90° . Then the air will be expelled from the space between the end surface of the piston and the cylinder cover through Hole B. The counterclockwise operation is on the contrary, with pressure inputted from Hole B and expelled from Hole A.

(二)多弹簧返回式执行机构工作原理:

当气动执行机构装置电磁阀换向接用系统气源后，空气从孔A处进入，使室内加压，推动两活塞外移，压缩弹簧，齿杆逆时针方向旋转。带动阀芯反转90° ，指示阀门关闭(或开启)。当改变信号电磁阀换向，压力从孔释放，弹簧作用力迫使活塞靠拢，齿杆迅速按顺时针方向旋转，带动阀芯也顺转90° ，指示阀门开启(或关闭)。

II. Working principle of the multi-spring returning actuator:

After the electromagnetic valve of pneumatic actuated device reversing its direction and being supplied by system air source, the air enters through Hole A and makes the pressure increased, which in turn forces the two piston move outward, presses the spring and rotate the teeth bar counterclockwise. The valve core is driven to reversely rotate 90° , indicating the valve to close (or open). When the change of signals tells the electromagnetic valve reverse its direction again, the pressure is released from the holes, and then the functioning spring forces the pistons to close to each other, making the teeth bar quickly rotate clockwise. The valve core is also driven to rotate 90° , indicating the valve to open (or close).

www.cv3000.com

整机主要技术参数 Main technical parameters:

公称压力 Nominal pressure	1.6,2.5,4.0,6.4(MPa) ANSI 150,300(Psi)
公称通径 Nominal diameter	DN15~400mm 1/2"~16"
适用介质 Suitable medium	按材质适应水，蒸气，石油，硝酸，粘性液体，强氧化性等介质 The material is suitable for medium of water, steam, petroleum, nitric acid, viscous liquid, strong oxide and etc.
介质温度 Medium temperature	-40℃~+180℃,-40℃~+350℃非金属材料密封或金属材料密封 Non-metallic material sealing or metallic material sealing
泄漏量 Leakage	0，符合ANSI B16,10A 5级标准 0, measure up the standard of ANSI B16, 10A, V level
球体转角 Sphere turning angle	90℃ ± 1~1.5°
阀体材质 Body material	WCB ZG0Cr18Ni9Ti,ZG0Cr18Ni12Mo2Ti,CF8,CF8M
阀座材质 Seat material	聚四氟乙烯(PTFE)常温，特制PPL，高温，金属阀座 PTFE, normal temperature, specially-made PPL, high temperature, metal valve seat
气缸工作压力 Cylinder working pressure	0.4~0.7MPA
气缸开关方式 Cylinder on-off mode	双作用式，多弹簧返回式，单作用式Double action, multi-spring returning mode, single action
气缸空气耗量 Cylinder air consumption	每一冲程(行程)5.6巴或80磅/英寸^2 5.6 bar or 80 Psi per stroke
电磁阀防爆级组 Explosion-proof group of electromagnetic valve	d Ⅱ BT4(dic4)(可供普通型，防爆型二种)(can supply for the conventional type and the anti-explosion type)
电磁阀电源 Power supply of electromagnetic valve	220VAc, 24VDc

注：特殊场合可根据用户要求订购配置。Note: In special circumstances, outfit components may ordering by users' requirements.

ZSHR带手操器法兰O型球阀
ZSHR MANUALLY OPERATED FLANGE O TYPE BALL VALVE

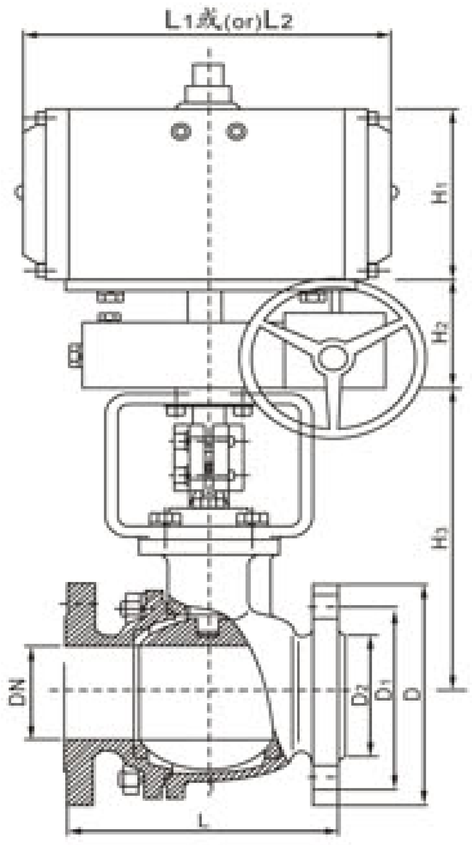

主要连接及外形尺寸 Main connection and external dimensions(mm)

型号 (Model) ZSHRO-16																	
执行器 Actuator	规格 Spec.(mm)		45	60 (63)	85 (83)	105	125	140	160	210	270	300	350	400
	双作用 A 系列 Donble effect A series	L_1	158	172	197	248	295	360	370	540	580	640	736	804
		H_1	85	101	128	153	185	205	226	270	360	390	470	510
	单作用 B 系列 Single effect B series	L_2	166	196	214	288	334	420	494	683	748	846	932	1066
		H_1	95	118	140	164	185	203	227	288	374	390	470	510
手轮机构 Handwheel machine	规格 Spec.(mm)		XLHJ38				XLHJ54				XLHJ80			
			32		38		38		48		48		60	
	H_2		82		82		95		95		114		114	

法兰球阀 Flange ball valve																	
规格 Spec.(mm)	DN15	DN20	DN25	DN32	DN40	DN50	DN65	DN80	DN100	DN125	DN150	DN200	DN250	DN300	DN350	DN400
D	95	105	115	135	145	160	180	195	215	245	280	335	405	460	520	580
D_1	65	75	85	100	110	125	145	180	160	210	240	295	355	410	470	525
D_2	45	55	65	78	85	100	120	135	155	185	210	265	320	375	435	485
L	130	130	140	165	165	203	222	241	305	356	394	457	533	610	686	762
H_3	149	152	160	205	215	252	261	313	360	436	506	660	688	725		

注：L1、L2分别为双作用和单作用执行器尺寸。 Note: LI and L2 are respective dimension of double effect and single effect actuator.

三千控制阀网 www.cv3000.com